6 W2 Be

6.5″ Utopia Be® woofer

- W cone
- Aluminum focus phase plug
- Neodymium magnet
- Zamak basket

Specifications

Nominal power	100 W	
Maximum power	200 W	
Sensitivity (2.83V/m)	91.5 dB	
Cone	W	
Surround	Rubber	
Nom. impedance	4 ohm	
DC resistance	2.91 ohm	
VC diameter	40 mm	1.57 in
VC height	15 mm	0.6 in
Former	Black Kapton®	
Layers	2	
Wire	Copper	
Inductance	0.42 mH	
Xmax	4.5 mm	0.18 in
Magnet	Neodymium	
Flux density	0.8 T	
Gap height	6 mm	0.24 in
Net weight	0.85 kg	1.9 lbs

Frequency Response / Impedance

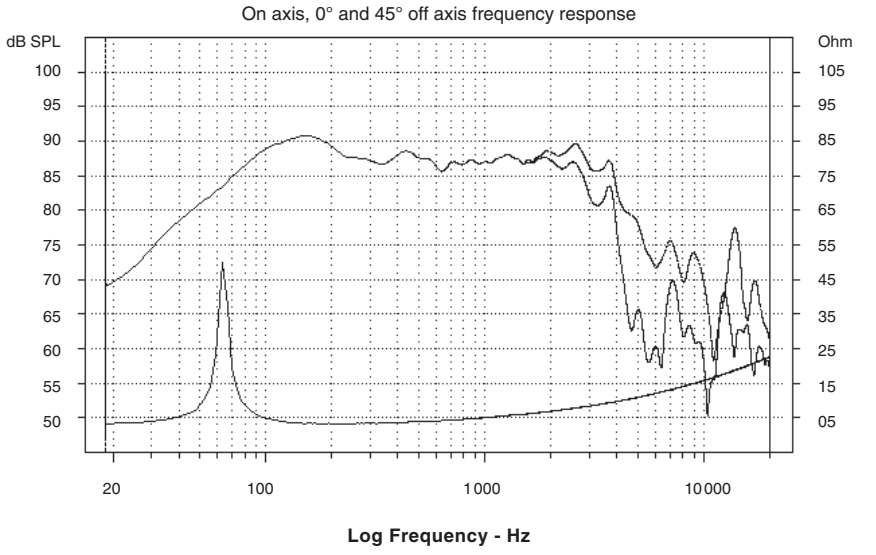

Parameters

Fs	64.39 Hz
Vas	9.19 l
Qts	0.75
Qes	0.79
Qms	14.73
Re	2.91 ohm
Sd	132.73 cm^2
Cas	6.54E-08 m^5/N
Mas	93.37 kg/m^4
Ras	2564.53 ohm.ac
Cms	3.71E-04 m/N
Mms	16.45 g
Rms	0.452 kg/s
Ces	671.02 mF
Les	9.1 mH
Res	54.26 ohm
Bl	4.95 N/A
SPL	86.76 dB/W/m

Mechanical Drawing

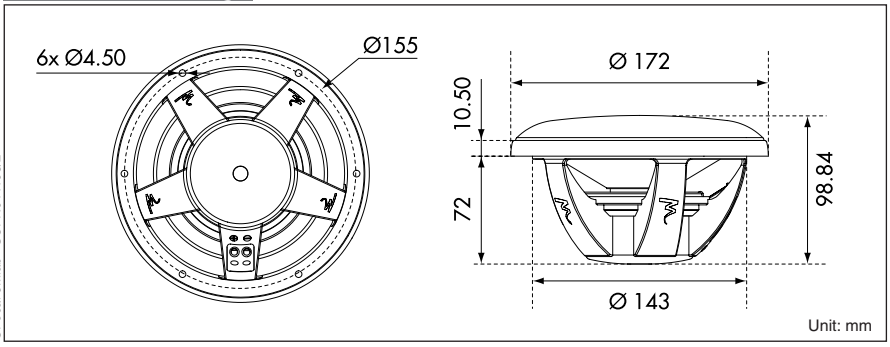

©Focal-JMlab - SCFR041108/2

Focal® is a trademark of Focal-JMlab®
108, rue de l'Avenir - BP 374 - 42353 La Talaudière cedex - France - Tel. +33 4 77 43 57 00 - Fax +33 4 77 43 57 04 - www.focal-fr.com

TBe

Utopia Be® tweeter

- **Pure Beryllium inverted dome**
- **High power Neodynium ring magnet**
- **Thick cast zinc alloy mounting**

Specifications

Nominal power	15 W (without filtering)	
Maximum power	200 W (with filtering)	
Sensitivity (2.83V/m)	94.1 dB	
Cone	Beryllium	
Surround	Foam	
Nom. impedance	8 ohm	
DC resistance	6 ohm	
VC diameter	20 mm	0.78 in
Former	Aluminum	
Layers	2	
Wire	Aluminum	
Inductance	0.06 mH	
Xmax	-	
Magnet	Neodymium	
Flux density	2.1 T	
Gap height1	2.5 mm	1 in
Net weight	0.2 kg	0.44 lb

Frequency Response / Impedance

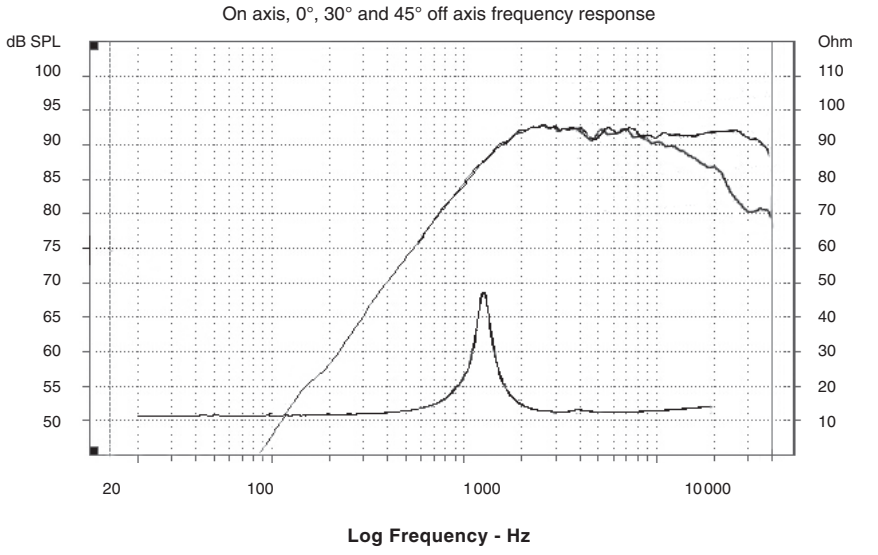

Parameters

Fs	1294 Hz
Vas	-
Qts	-
Qes	-
Qms	-
Re	6 ohm
Sd	4.9 cm^2
Cas	-
Mas	-
Ras	-
Cms	-
Mms	-
Rms	-
Ces	-
Les	-
Res	42 ohm
Bl	-
SPL	93 dB/W/m

Mechanical Drawing

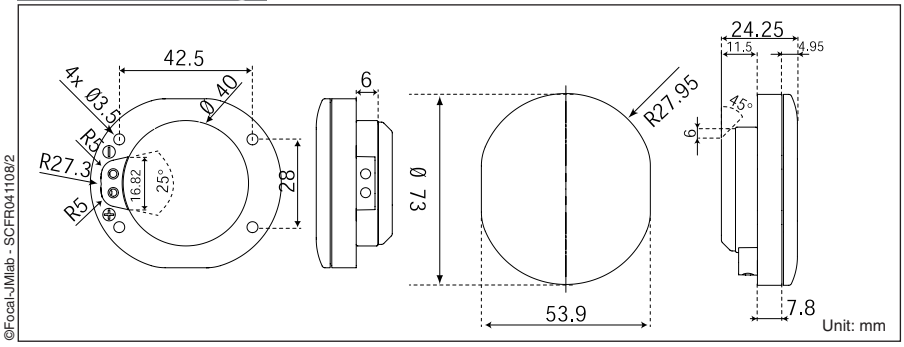

©Focal-JMlab - SCFR041108/2

Focal® is a trademark of Focal-JMlab®
108, rue de l'Avenir - BP 374 - 42353 La Talaudière cedex - France - Tel. +33 4 77 43 57 00 - Fax +33 4 77 43 57 04 - www.focal-fr.com